ZONE	SYMBOL	REVISION	APPROVAL	DATE

RoHS Compliant

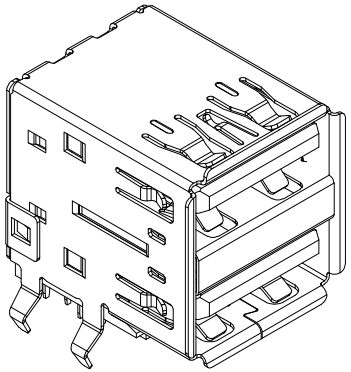

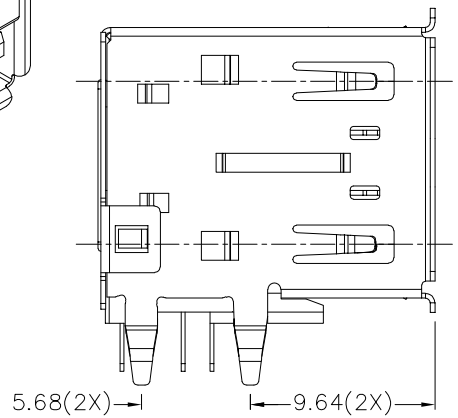

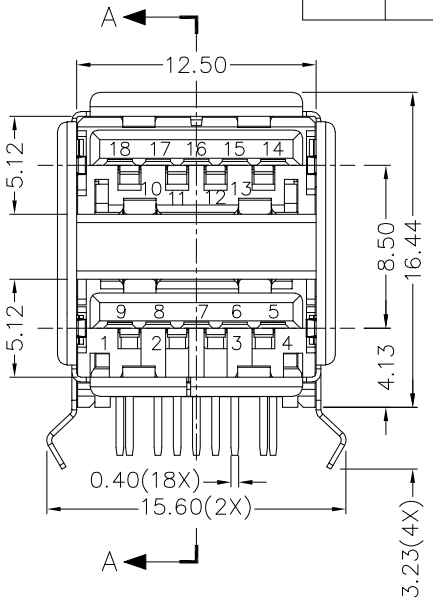

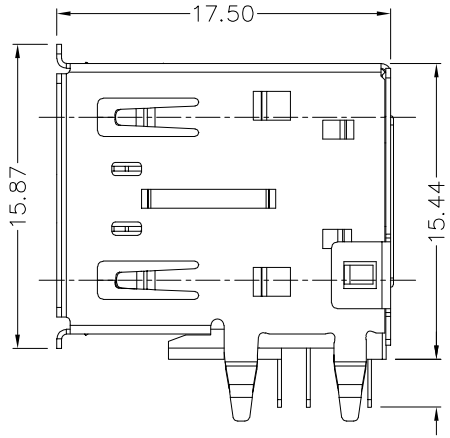

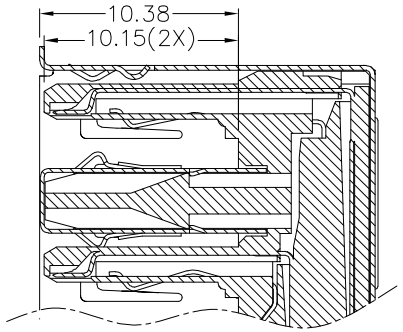

SECTION A–A

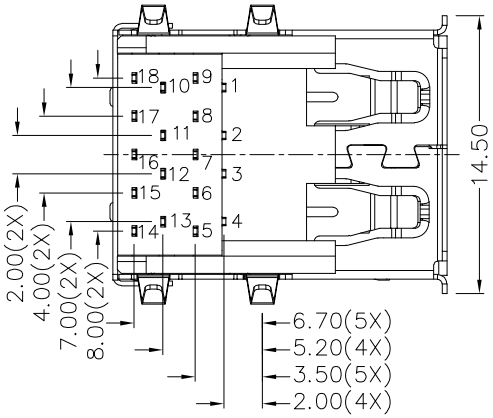

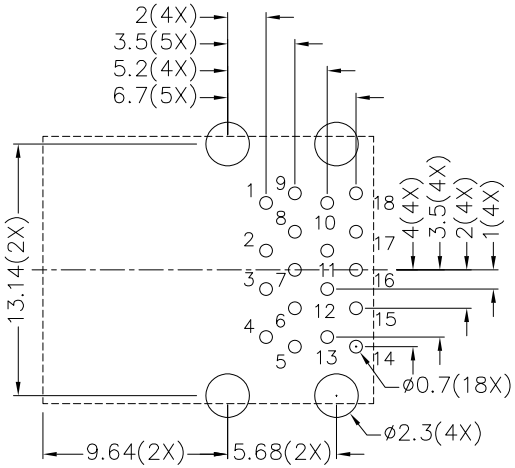

RECOMMENDED PCB LAYOUT
TOLERANCE: ±0.05
(TOP VIEW)

PIN NO.	SIGNAL NAME	PIN NO.	SIGNAL NAME
1	VBUS	10	VBUS
2	D–	11	D–
3	D+	12	D+
4	GND	13	GND
5	SSRX–	14	SSRX–
6	SSRX+	15	SSRX+
7	GND	16	GND
8	SSTX–	17	SSTX–
9	SSTX+	18	SSTX+
SHELL	SHIELD		

DESCRIPTION	MATERIAL	PLATING
TERMINAL–A	BRASS	NICKEL PLATED ON ALL AREA, GOLD FLASH ON CONTACT AREA, TIN PLATED ON SOLDER AREA
TERMINAL–B	BRASS	NICKEL PLATED ON ALL AREA, GOLD FLASH ON CONTACT AREA, TIN PLATED ON SOLDER AREA
SHELL	STAINLESS STEEL	NICKEL(Ni)
MIDDLE PLATE	STAINLESS STEEL	
HOUSING	THERMOPLASTIC	COLOR: BLUE
COVER	THERMOPLASTIC	COLOR: BLUE

LINKPLEX TECHNOLOGY LIMITED

DESIGN	H.L.TAN	DATE	30–8–2023	SCALE	2.5:1
DRAWING	J.Q.ZHOU	DATE	5–7–2026	MATERIAL	
CHECK	T.Y.LI	DATE	5–7–2026	DWG. NO.	TZ\UB3007–1–B/1.0
APPROVAL	H.Q.ZHOU	DATE	5–7–2026	SHEET	1/1

PART NAME	USB 3.2 GEN1 A TYPE CONNECTOR	TOLERANCE UNLESS OTHERWISE SPECIFIED:	0.0±0.35 0.00±0.25 0.000±0.15	UNIT: mm
PART NO.	LUB–3007–1			