ZONE	SYMBOL	REVISION	APPROVAL	DATE
		CHANGE PRODUCT NUMBER	H.Q.ZHOU	17-9-2023

RoHS Compliant

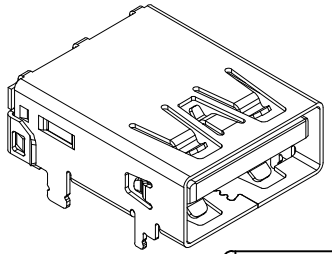

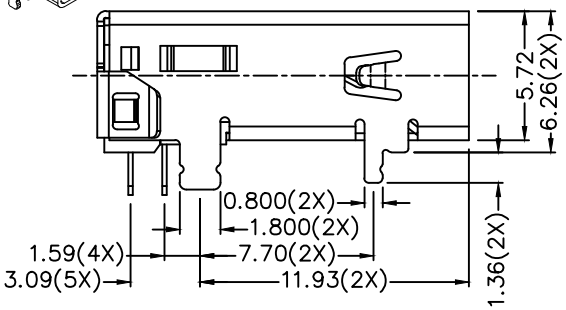

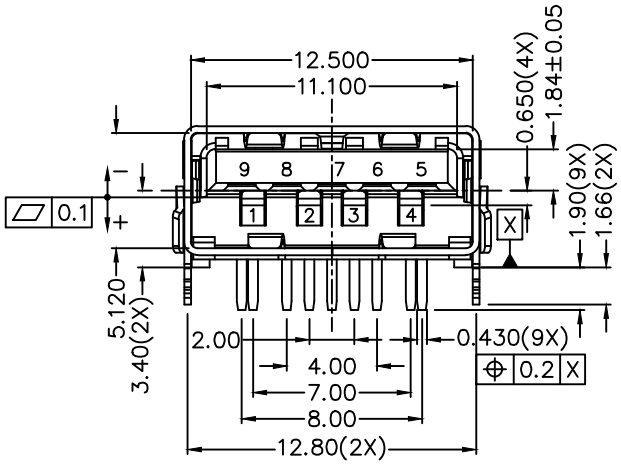

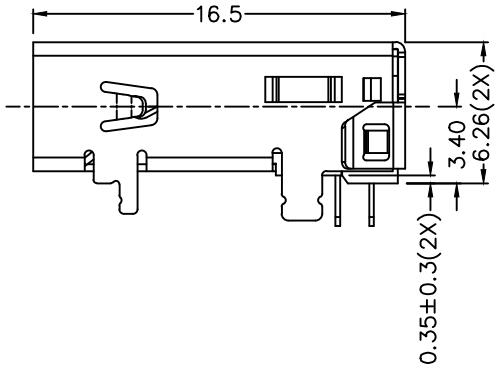

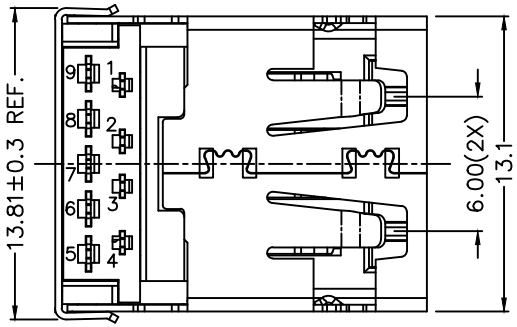

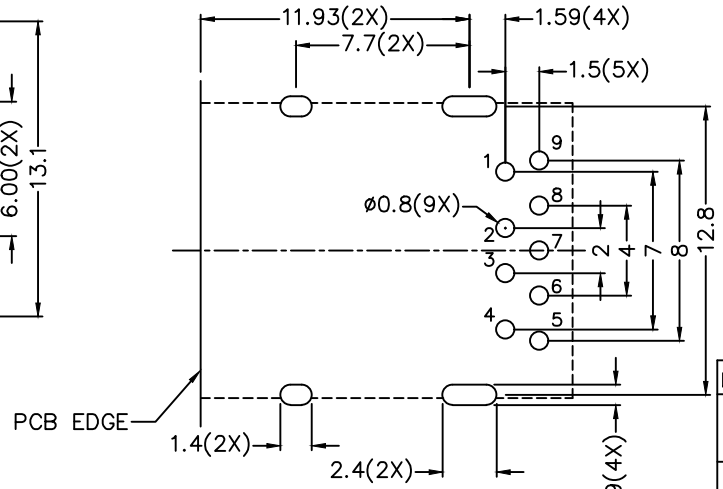

RECOMMENDED PCB LAYOUT
TOLERANCE: ±0.05
(TOP VIEW)

PIN NO.	SIGNAL NAME	PIN NO.	SIGNAL NAME
1	VBUS	5	SSRX−
2	D−	6	SSRX+
3	D+	7	GND
4	GND	8	SSTX−
SHELL	SHIELD	9	SSTX+

DESCRIPTION	MATERIAL	PLATING
TERMINAL−A	COPPER ALLOY	Ni 80u" MIN ON ALL AREA, GOLD FLASH ON CONTACT Sn 100u" MIN ON SOLDER AREA
TERMINAL−B	BRASS	Ni 80u" MIN ON ALL AREA, GOLD FLASH ON CONTACT Sn 100u" MIN ON SOLDER AREA
SHELL	STAINLESS STEEL	NICKEL(Ni)
PLASTIC	HIGH TEMP. PLASTIC	COLOR: BLUE

LINKPLEX TECHNOLOGY LIMITED

PART NAME	USB 3.2 GEN2 A TYPE CONNECTOR	TOLERANCE UNLESS OTHERWISE SPECIFIED:	0.0±0.3 0.00±0.2 0.000±0.1	UNIT: mm	DESIGN	H.L.TAN	DATE	11-3-2021	SCALE	3:1
PART NO.	LUB-3004				DRAWING	J.Q.ZHOU	DATE	17-9-2023	MATERIAL	
					CHECK	T.Y.LI	DATE	17-9-2023	DWG. NO.	TZ\UB3004-A/1.2
					APPROVAL	H.Q.ZHOU	DATE	17-9-2023	SHEET	1/1