ZONE	SYMBOL	REVISION	APPROVAL	DATE
		ADD CENTER PIN TOLERANCE	H.Q.ZHOU	8-10-2025

RoHS Compliant

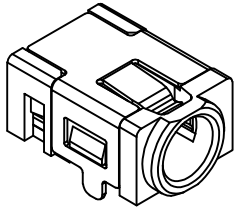

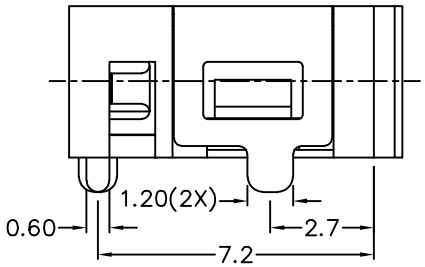

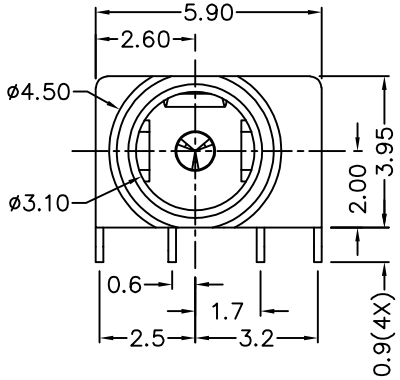

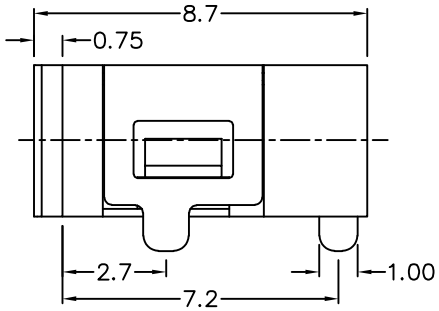

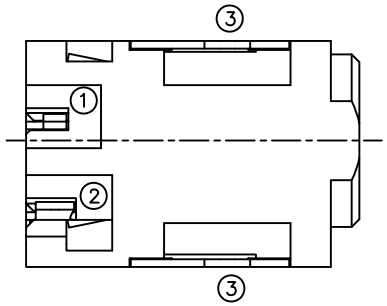

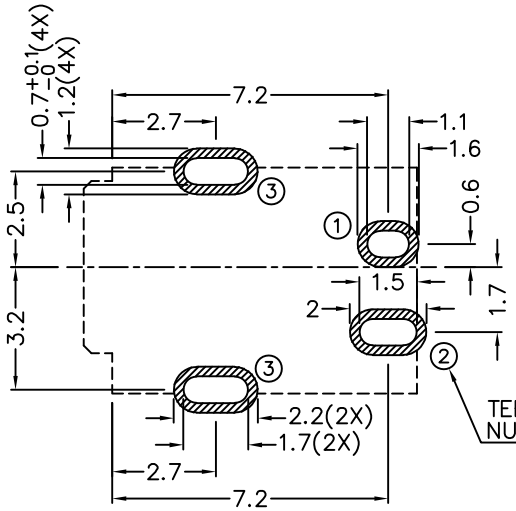

RECOMMENDED PCB LAYOUT
TOLERANCE: ±0.05
(TOP VIEW)

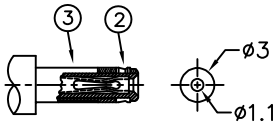

RECOMMENDED
DC MATING PLUG

* MATERIAL

TERMINAL 1 : BRASS
TERMINAL 2 : COPPER ALLOY
TERMINAL 3 : COPPER ALLOY
HOUSING : HIGH TEMP. PLASTIC

MODEL NO.	LDC-115H
SCHEMATIC	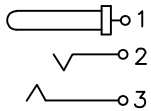
CENTER PIN	ø1±0.05mm

LINKPLEX TECHNOLOGY LIMITED

PART NAME	HIGH CURRENT DC POWER SOCKET	TOLERANCE UNLESS OTHERWISE SPECIFIED:	0.0±0.2 0.00±0.1 0.000±0.05	UNIT: mm	DESIGN	H.L.TAN	DATE 13-12-2017
PART NO.	LDC-115H				DRAWING	N.X.LIU	DATE 8-10-2025
					CHECK	T.Y.LI	DATE 8-10-2025
					APPROVAL	H.Q.ZHOU	DATE 8-10-2025

SCALE	5:1
MATERIAL	*
DWG. NO.	TZ\DC115H-A/1.1
SHEET	1/1