ZONE	SYMBOL	REVISION	APPROVAL	DATE
		ADD CENTER PIN TOLERANCE	H.Q.ZHOU	8-10-2025

RoHS Compliant

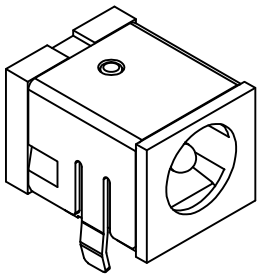

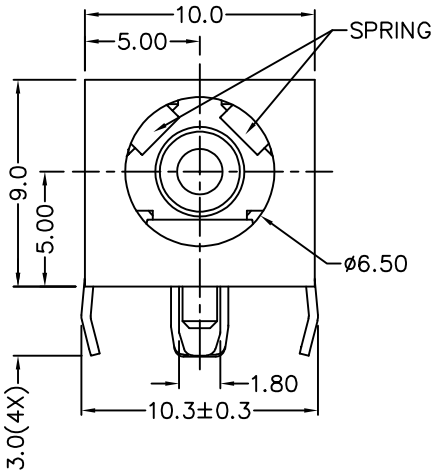

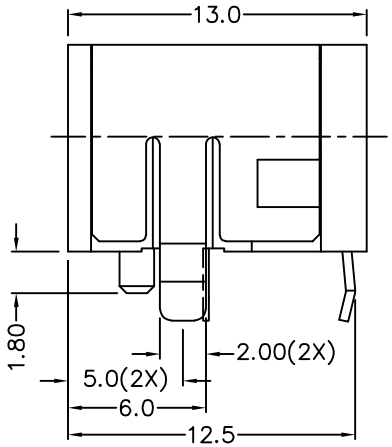

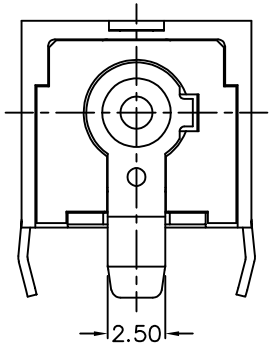

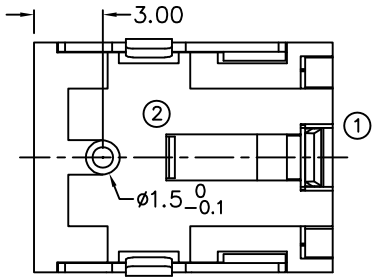

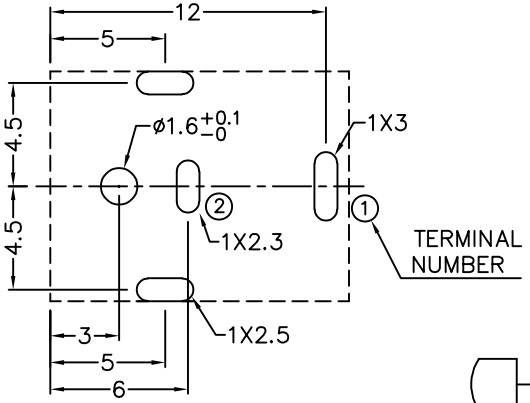

RECOMMENDED PCB LAYOUT
TOLERANCE: ±0.05
(TOP VIEW)

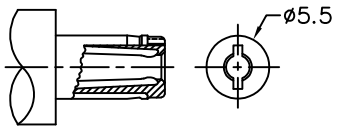

RECOMMENDED
DC MATING PLUG

* MATERIAL

CENTRE PIN	: COPPER
TERMINAL 1	: BRASS
TERMINAL 2	: COPPER ALLOY
SPRING	: COPPER ALLOY
SHIELD	: BRASS
HOUSING	: THERMOPLASTIC
COVER	: THERMOPLASTIC

MODEL NO.	LDC-078HS
SCHEMATIC	1 / 2
CENTER PIN	ø2±0.05mm
	ø2.5 +0 -0.1 mm

LINKPLEX TECHNOLOGY LIMITED

DESIGN	T.Y.LI	DATE	20-8-2008	SCALE	3:1
DRAWING	J.H.ZHOU	DATE	8-10-2025	MATERIAL	*
CHECK	H.L.TAN	DATE	8-10-2025	DWG. NO.	TZ\DC078HS-B/1.2
APPROVAL	H.Q.ZHOU	DATE	8-10-2025	SHEET	1/1

PART NAME	HIGH CURRENT DC POWER SOCKET	TOLERANCE UNLESS OTHERWISE SPECIFIED:	0.0±0.2 0.00±0.1 0.000±0.05
PART NO.	LDC-078HS	UNIT: mm	